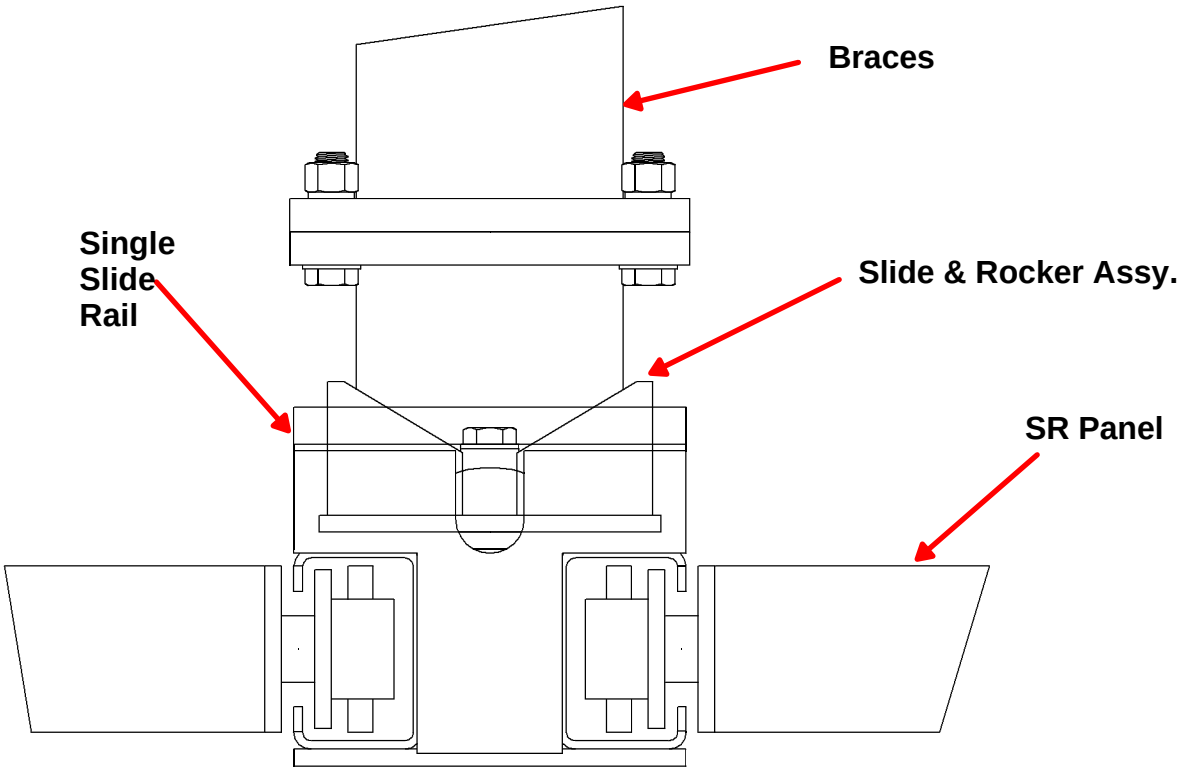
Braces
Single
Slide
Rail
Slide & Rocker Assy.
SR Panel

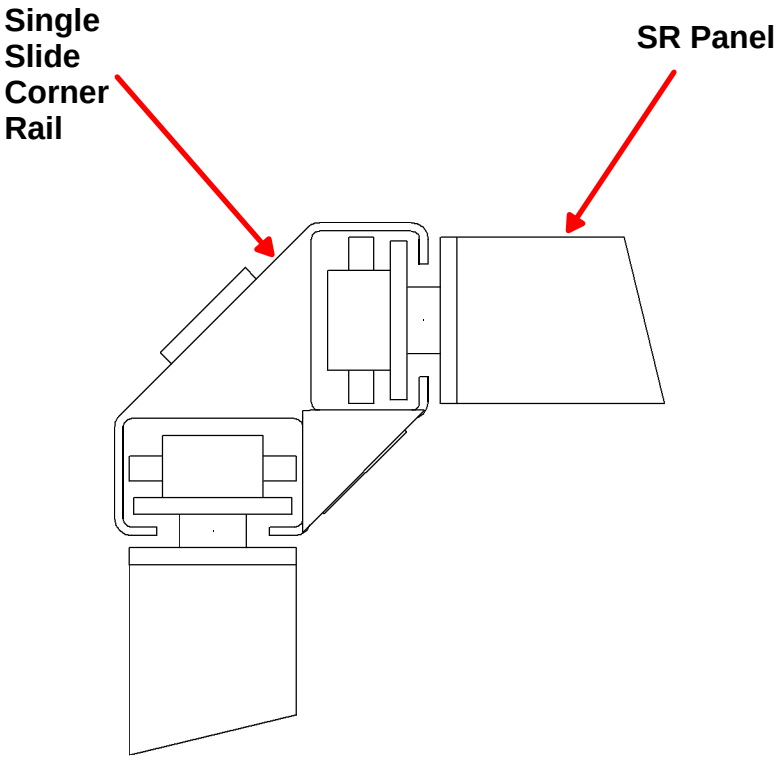
Single
Slide
Corner
Rail
SR Panel